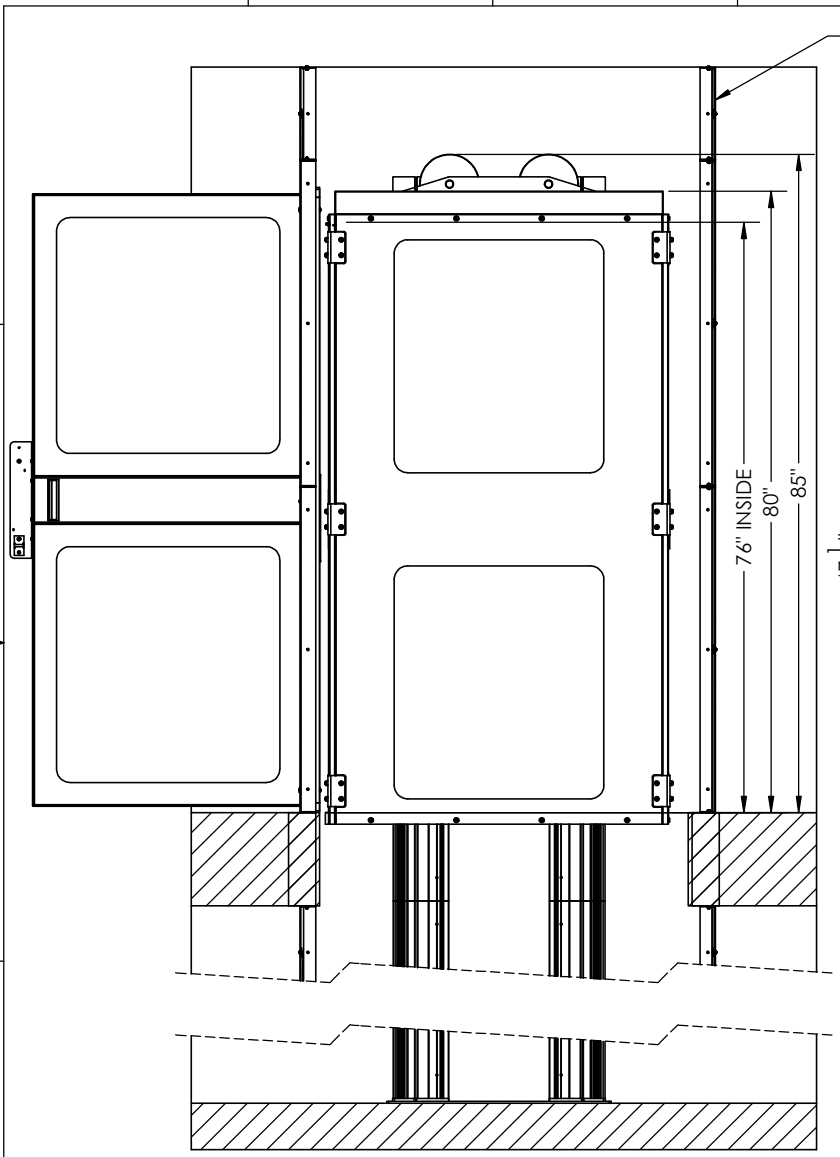

SECTION A-A
SCALE 1 : 16

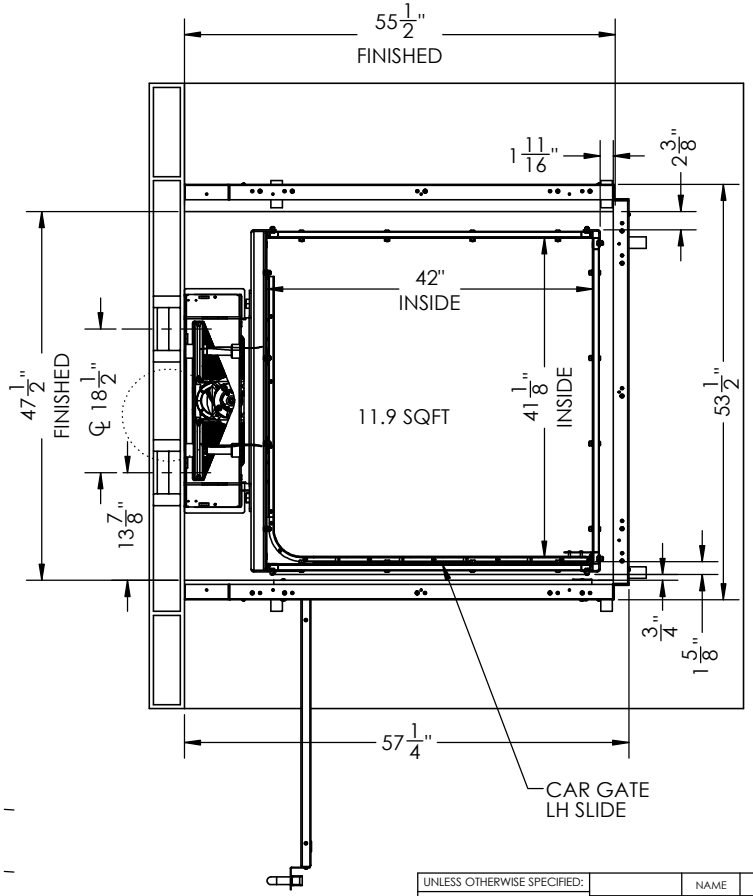

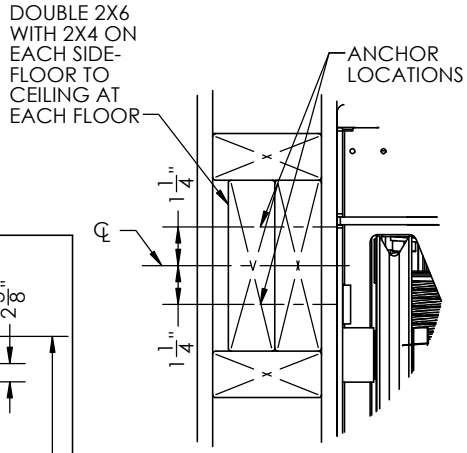

DETAIL A
SCALE 1 : 4

Battery Powered: 24 VDC Control System
Rated Load: 500 lbs
Speed: 15 fpm
Max. Travel: 21'-0"
Winding Drum Drive with dual 1/4" aircraft cables
Automatic up/down controls
Key Lock on controls
Emergency Stop Switch and Alarm
Recessed Automatic LED Car Light
Status LED Indicator
Door Position switch on Sliding Car Door
Slack Cable Safety Device with Switch
Final Limit Switches

DESIGNED TO COMPLY
WITH ASME A17.1 PART 5.3
WHEN PROPERLY INSTALLED

SPECIFICATIONS AND DIMENSIONS
SUBJECT TO CHANGE WITHOUT NOTICE

PROPRIETARY AND CONFIDENTIAL
THE INFORMATION CONTAINED IN THIS DRAWING IS THE SOLE PROPERTY OF STAYING HOME CORPOTATION. ANY REPRODUCTION IN PART OR AS A WHOLE WITHOUT THE WRITTEN PERMISSION OF STAYING HOME CORPORATION IS PROHIBITED.

UNLESS OTHERWISE SPECIFIED:
DIMENSIONS ARE IN INCHES
TOLERANCES:
FRACTIONAL ±1/16
ANGULAR: ±0.5°
ONE PLACE DECIMAL ±0.1
TWO PLACE DECIMAL ±0.01
THREE PLACE DECIMAL ±0.005
INTERPRET GEOMETRIC TOLERANCING PER:
MATERIAL
FINISH
DO NOT SCALE DRAWING

	NAME	DATE
DRAWN		7/16/2019
CHECKED		
ENG APPR.		
MFG APPR.		
Q.A.		

PROJECT:

CREST

TITLE:
EZ6 LEFT ENTRY, LH CAR DOOR
INSIDE SHC HOISTWAY

SIZE B | DWG. NO. TYP - EZ6L-A-LH | REV

SCALE: 1:96 | WEIGHT: | SHEET 1 OF 1